Male connector, field-attachable

V1S-W-BK

- Field-attachable
- Screw terminal connection
- Metal locking
- Knurled nut suitable for tool assembly
- UL Recognized Component

Male connector M12 angled A-coded 4-pin, for cable diameter 4 - 6 mm, field-attachable

Dimensions

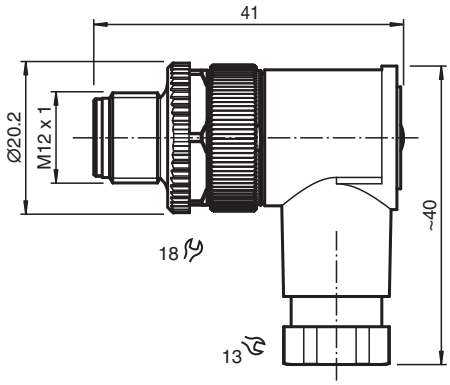

Technical Data

General specifications		
Connector 1		
Connection		plug
Construction type		M12
Style		angled
Locking		screw connection
Number of pins		4
Coding		A-coded
Customization		Coding rotateable in steps of 90°
Electrical specifications		
Operating voltage	U_B	max. 250 V AC/DC
Operating current	I_B	max. 4 A
Insulation resistance		min. 100 MΩ
Conformity		
Degree of protection		EN 60529
Plug connection		connector M12 x 1 : IEC 61076-2-101
Approvals and certificates		
UL approval		
Maximum permissible operating current		max. 3 A
UL File Number		E363587

Release date: 2024-12-05 Date of issue: 2024-12-05 Filename: 224886_eng.pdf

Technical Data

Ambient conditions	
Ambient temperature	-40 ... 85 °C (-40 ... 185 °F)
Pollution degree	3
Mechanical specifications	
Plug connector	
Tightening torque	0.6 Nm
Tool installation	straight knurling , hexagon nut SW = 18 mm
Mating cycles	min. 50
Degree of protection	IP67
Connection	screw terminals for max. 0.75 mm² / AWG 18
Cable	
Sheath diameter	4 ... 6 mm
Core cross section	0.75 mm² / 18 AWG max.
Installation	screw terminals 0.4 Nm pressure nut 0.75 Nm body 1 Nm
Mass	24 g
Material	
Plug connector	
Screw connection	CuZn, nickel-plated
Body	PA, black
Contact surface	CuSnZn

Connection Assignment

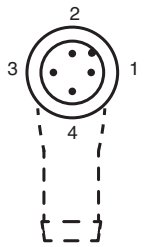

Connection

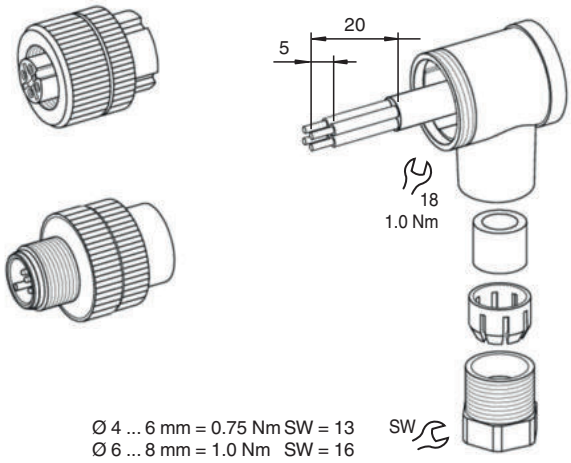

Release date: 2024-12-05 Date of issue: 2024-12-05 Filename: 224886_eng.pdf